Right Hemisphere®
Deep Exploration™ CAD Edition

- Accelerate delivery of compelling 2D and 3D product graphics to improve sourcing, sales, and service product communications
- Raise productivity and expand pool of 2D and 3D content authors
- Leverage existing CAD assets without expensive CAD software or engineering resources

Introduction

How do you bridge the massive disconnect between engineering who must develop your products and the rest of your extended enterprise who must source, sell and service your products?

With Right Hemisphere product communication and collaboration products you can capitalize on your existing investments in 3D CAD and multimedia to achieve faster time to market, lower 2D and 3D graphics costs, and a higher return on CAD and multimedia assets.

Right Hemisphere's Deep Exploration CAD Edition is the world's most advanced desktop 2D and 3D product communication translation, authoring and publishing application. Right Hemisphere's Deep Exploration CAD Edition lets you:

- Transform CAD models into lightweight product graphics
- Easily author a range of 2D and 3D product graphics
- Publish finished product graphics and documents
- Augment high volume, 2D and 3D graphics processes

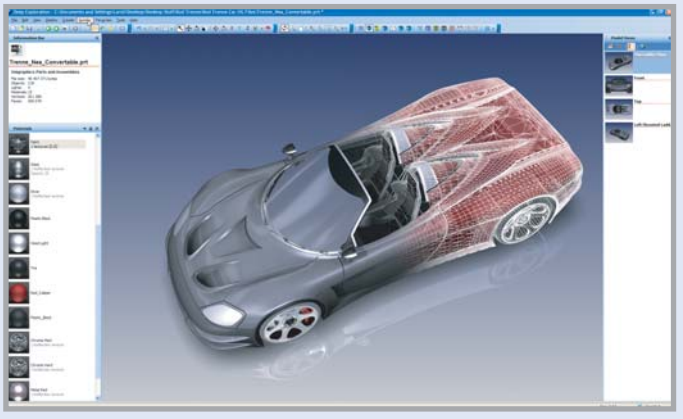

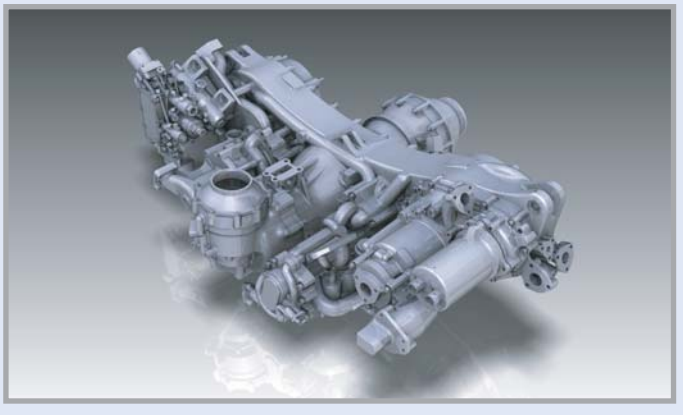

Unigraphics CAD files courtesy of Trenne Technologies, Inc.

Transform heavy CAD "Solid Geometry" to uniform lightweight polygonal models optimized for 2D and 3D graphics generation including photorealistic renderings, vector and raster images, real-time animations in PDF, HTML, and Microsoft Office™.

Transform CAD Models into Lightweight Product Graphics

Your engineering teams are already using Computer Aided Design (CAD) applications and Product Data Management (PDM) systems to design increasingly complex products, get products to market faster, and improve their quality.

What if you could reuse these valuable assets within high impact product communcations across the rest of your extended enterprise?

- Sourcing communications such as product designs, product mockups, engineering change orders, requests for quote, manufacturing process sheets and more
- Sales communications such as catalogs, brochures, collateral, presentations, multimedia, and more
- Services communications such as operation and maintenance manuals, service bulletins, self-service guides, embedded diagnostics, CBTs, ILTs, IETMs, and more

All registered company names, brand names, product names, logos or trademarks are the property of their respective holders.
Copyright © Right Hemisphere 2007, All Rights Reserved.

Deep Exploration CAD Edition leverages your CAD models and existing DCC content as a source for lightweight, reusable product graphics. Deep Exploration CAD Edition translates, optimizes, and repairs these models as the first step in producing a range of technical illustrations, photoreal images, and 3D animations.

With Deep Exploration CAD Edition as your key source for product graphics, your Digital Content Creation applications users (3ds max™, Deep Creator™, Lightwave 3D™, Cinema 4D™, Flash™, Illustrator™, Maya™, Photoshop™, and XSI™, etc.) no longer need to start from scratch by hand modeling complex parts and assemblies. Eliminating this activity frees time and unleashes creativity.

Deep Exploration CAD Edition Transformation Capabilities

Translate complex CAD and DCC models accurately

- Import and translate over 80 CAD and 2D/3D graphic formats
- Control polygonal mesh density and visual quality
- Maintain CAD and DCC 3D hierarchy, materials, and attributes such as part identifiers, assembly structures, call outs
- Translate key frame animations, kinematics, and softbody animations across all major DCC file formats
- Translate and structure PMI data with additional PMI Module
- Translate, structure and display vital CAD Product Manufacturing Information (PMI) data to significantly reduce the cost of 2D drawings

Optimize 3D graphics

- Best in class, dynamic polygon reduction
- Remove hidden objects
- Remove small objects dynamically based on size
- Merge duplicate materials
- Remove unused materials
- Join equal points
- Minimize file size
- Object instancing for smaller file sizes, faster data transfer and increased real-time performance

Repair 3D graphics

- Unify normals
- Invert faces and normals
- Heal polygonal meshes, join cracked models, and weld vertices while maintaining edge definition

Easily Author a Wide Range of 2D and 3D Product Graphics

Multimedia sourcing, sales, and service product communications require a wide variety of 2D and 3D product graphics including: line art for parts catalogs, high quality photoreal images for marketing brochures, 3D steps and product views for supplier assembly instructions, highly interactive 3D animations for IETM-style maintenance procedures, and many more.

How many different types of 2D and 3D product graphics do you produce and update today?

Deep Exploration CAD Edition can supply the full range of rich 2D and 3D product graphics needed by your customers, partners, and employees. And Deep Exploration CAD Edition's powerful, yet easy to use, authoring tools expand your pool 2D and 3D content authors and significantly improve their productivity.

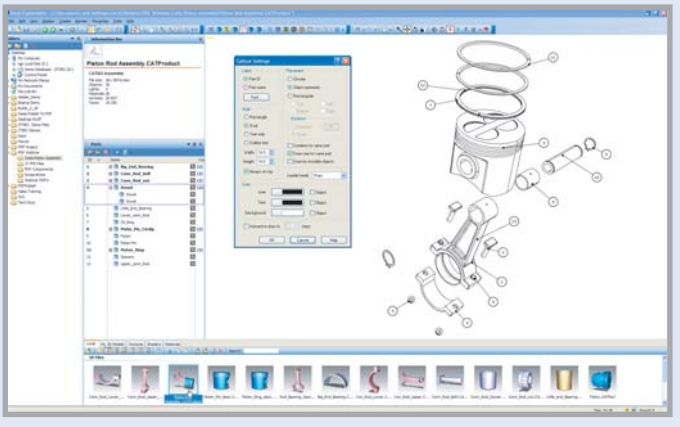

Produce a variety of technical illustrations, in a variety styles, supporting industry standard formats and specifications such as S1000D, including line illustrations with automated callouts.

All registered company names, brand names, product names, logos or trademarks are the property of their respective holders.
Copyright © Right Hemisphere 2007, All Rights Reserved.

Deep Exploration CAD Edition Authoring Capabilities

Author photoreal 3D images

- Apply real world materials from advanced materials palette
- Edit material attributes including diffuse, bump, opacity, reflection, and more
- Add UV maps
- Bake shadows to texture maps or vertex colors via Realight™ tools to simulate global illumination

Author 3D animations

- Create and edit advanced key frame 3D objects, position, rotation, material, texture UV and camera animations
- Add animation sequences and sequence tracks to independently control multiple animations
- Assign sequences to steps to create assembly / disassembly procedures
- Edit animation key frame location and properties using timeline
- Automatically explode assemblies

Author steps

- Communicate interactive assembly / disassembly procedures
- Include step name, description, and one or more sequences for each step

Author model views

- Communicate via predefined views of graphics to ease viewing and navigation
- Associate current camera position, render mode, and 3D object visibility

Author high quality line art illustrations

- Support industry standard vector and raster file formats
- Control edge threshold, line weight, color and shading parameters
- Create illustration from predefined isometric, diametric, and trimetric views
- Render as Line Illustration, Solid Outline, Shaded Illustration, Transparent, Wireframe, and more
- Generate and manipulate callouts using advanced callout authoring techniques
- Display Bill of Materials
- Support orthographic and perspective camera projection
- Thrustline creation including animation
- Thick n Thin line rendering, color fill, and more
- 2D and 3D Symbol library that is S1000D compliant

View and markup graphics

- View graphics interactively including rotate, pan, and zoom
- Change lighting, render, materials, and more on the fly
- Replay animations, steps and sequences
- View cross sections, cutting plane, half and quarter sections - box section cutting
- Markup, measure, and add various types of annotations

Publish Finished Product Graphics and Documents

Product graphics are used across your customers, suppliers, and employees to effectively communicate ideas and transact business. Effective communication with these individuals, including a generation of computer game users, requires rich multimedia content and a multimedia publishing approach.

How do you publish your product graphics today? Do you embed them in Microsoft Office or Adobe PDF documents? Do you use them as source content in your DCC authored 3D scenes? Do you display them on the Web? Or are you missing this opportunity entirely?

By exporting over 40 leading 2D and 3D graphics publishing formats, Deep Exploration CAD Edition accelerates delivery of compelling 2D and 3D product graphics so you can improve your sourcing, sales, and service product communication.

Deep Exploration CAD Edition Publishing Capabilities

- Export to over 40 2D and 3D graphics formats
- Publish and view 2D and animated 3D graphic content within Microsoft Office and Adobe Framemaker documents
- Publish and view 2D and animated 3D graphic content within HTML pages
- Publish interactive 3D PDF documents with included PDF Publishing Module
- Publish JT/PMI data with additional JT/PMI Module

All registered company names, brand names, product names, logos or trademarks are the property of their respective holders.
Copyright © Right Hemisphere 2007, All Rights Reserved.

Simply click on the image to interact with the 3D graphic.

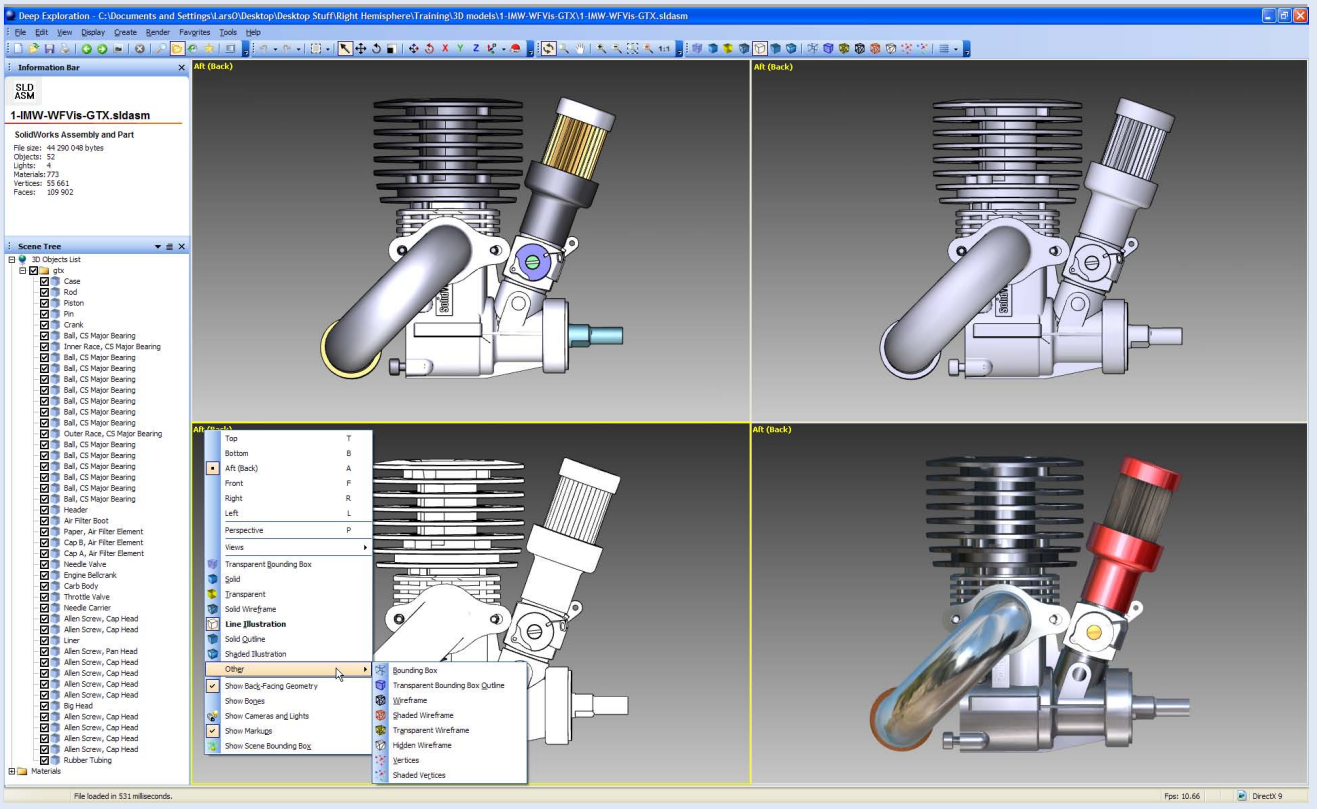

Independent viewport rendering controls allow you to easily compare technical illustration rendering styles before publishing the final 2D or 3D graphic.

Augment High-Volume, 2D and 3D Parts to Publishing Graphics Processes

Automating business processes is a proven strategy to accelerate time to market, improve quality and cut costs. Yet typical 2D and 3D graphics publishing processes are characterized by manual steps, points of automation, and limited integration. The result is too few graphics and too much cost.

What if you could blend powerful server-based transformation and authoring, with powerful desktop tools that let your creative professionals be more creative?

Right Hemisphere's Deep Exploration CAD Edition works together with Deep Server to optimize your part to publication processes for 2D and 3D product graphics. You can define and pilot these processes in Deep Exploration CAD Edition and then automate them in Deep Server. You can automatically prepare graphics with Deep Server and then touch them up with Deep Exploration CAD Edition. Mix and match as required based on the type of graphic, volume, skills, business rules, and more.

Deep Exploration CAD Edition Graphics Process Augmentation Capabilities

- Use Deep Exploration CAD Edition to define and pilot graphics transformation and authoring processes before automating these processes in Deep Server

- Use Deep Exploration CAD Edition to perform final touch-ups on graphics authored by Deep Server

- Upload 3D graphics authored in Deep Exploration CAD Edition to Deep Server to automatically generate additional predefined 2D and 3D product graphics

- Use Deep Exploration CAD Edition for one-offs and other small projects where Deep Server scale automation is not required

- Use Deep Server's repository to manage 3D graphics authored in Deep Exploration CAD Edition

All registered company names, brand names, product names, logos or trademarks are the property of their respective holders.
Copyright © Right Hemisphere 2007, All Rights Reserved.

The Deep Exploration CAD Edition Difference

Bridge CAD and DCC to Raise Productivity	Unified Desktop Application to Produce your Illustrations, Images, and Animations	Integrate with Deep Server to Optimize High Volume, 2D and 3D Parts to Publishing Graphics Processes
Unlike engineering tools that force your subject matter experts, graphic artists, technical writers, subject matter experts and others to think like engineers and unlike digital content creation tools that force them to start from scratch, Deep Exploration CAD Edition lets 2D and 3D graphics authors leverage CAD models when authoring and publishing product communications.	Instead of using one tool for CAD transformation, another for 2D product illustrations, and a third for 3D animation and images, Deep Exploration is a complete 2D and 3D transformation, authoring, and publishing application that supports your diverse product graphics requirements.	Unlike today's time and labor intensive manual processes that rely on people and point authoring tools alone, Deep Exploration CAD Edition and Deep Server combine to automate and optimize the 2D and 3D product graphics processes that deliver a range of intermediate graphics, finished graphics, and even finished PDF documents all from accurate, up-to-date engineering data you already own.

Right Hemisphere

Right Hemisphere is the leading provider of enterprise product communication and collaboration solutions enabling manufacturers to optimize their global product development, launch, and support processes. Organizations have invested in operational processes and IT systems to improve product lifecycle efficiencies, yet delivery of precise and up-to-date product information to the extended enterprise in a timely, efficient and usable form is difficult today. Right Hemisphere maximizes knowledge transfer efficiency of product information to downstream stakeholders by automatically publishing product information readily available in CAD, PLM, and ERP systems into common document formats and business applications

Over 500 innovative manufacturers, including five of the top six automotive OEMs and nine of the top 10 U.S. aerospace and defense contractors rely on Right Hemisphere to dramatically accelerate time to market, increase product and services revenues, and lower product communications costs.

Learn more about Right Hemisphere at www.righthemisphere.com

All registered company names, brand names, product names, logos or trademarks are the property of their respective holders.
Copyright © Right Hemisphere 2007, All Rights Reserved.